‘Active’ Approach To Good Vibrations

Cummins Generator Technologies has been looking at new ways to reduce noise and vibration from generating-sets powered by small-displacement, ‘low-count’ cylinder engines.

Stand close to any generator big or small that’s powered by a reciprocating engine and you know when it’s working. The noise and vibrations from the engine are the obvious giveaway, and generating-set makers are constantly looking at ways to minimise them. In its quest for smoother, quieter-running products, Cummins Generator Technologies has come up with a new way of tackling generating-set engine vibration using an innovative solution known as ‘Active Torque Cancellation’ (ATC).

One simple way to make a generating-set quieter is to run its engine at low speeds. Unfortunately, at lower speeds vibration ‘modes’ can shift to lower frequencies too, to the point where the engine’s mounting system may not be able to cancel them out. Even worse, the lower frequency can trigger a resonance in the mounting system itself, resulting in unacceptable vibration levels. This can be a significant issue when the engine is a small displacement diesel with a ‘low cylinder-count’ (i.e. one or twin-cylinders) running at speeds of less than 2,000rpm.

Normally, there are a number of ways manufacturers can reduce transmitted vibration from the use of multiple-layers of isolation, improving the engine’s balance through counterweights and by fitting ‘active’ mounts. But those solutions aren’t always practical due to cost, weight and size-limitations. Ironically, when building small generating-sets, for example to provide electrical loads in recreational vehicles (RVs), an engine with the lowest number of cylinders is extremely attractive thanks to its cost, size and weight. Nevertheless, dealing with its inherent noise and vibration remains a major issue - especially as the user is often in close proximity to the generating-set.

Cummins Generator Technologies’ ATC system has been specifically developed to reduce the transmitted vibrations from generating-sets equipped with those lower cylinder-count engines and the first phase of the prototype-testing project was completed in 2009, with ATC successfully applied to a small, 0.48-litre displacement, two-cylinder engine and a 7.5kW permanent magnet synchronous machine.

However, since then the R&D team has taken the concept significantly further. In 2011, with ATC it was able to successfully cancel out low speed (idling) vibrations from a four-cylinder 4.5-litre engine installed in a DAF truck. This was clearly a far bigger challenge than the original small test engine and demonstrates the potential of ATC not only for generating-set applications, but also for commercial vehicles where it could also help reduce fuel consumption. So how does it work? In simple terms, ATC applies a controlled torque on the engine’s crankshaft to reduce the roll motion (around the crankshaft axis) which cuts down the amount of vibrations transmitted by the engine. Naturally there’s a bit more to it than that.

Testing on a four cylinder 4.5-litre engine

Cummins Generator Technologies has been looking at new ways to reduce noise and vibration from generating-sets powered by small-displacement, ‘low-count’ cylinder engines.

The two main causes of engine vibration are the varying cylinder pressures and the moving-masses inside it. In a four-stroke engine, during the power-stroke the cylinder pressure applies a huge amount of torque on the crankshaft, with that peak torque being significantly higher than the average torque. Conversely, the reciprocating masses of the engine result in a cyclic torque on the crankshaft, which is a function of the square of the speed. The resulting combined torque from these two inputs can be derived from the engine slider-crank mechanism and cylinder pressure data. For multi-cylinder engines, the torque contribution from each cylinder is added together with the appropriate phase shift. At low-speeds and for small engines, the reciprocating mass and the crank radius are small, resulting in a very low inertial torque component.

With the ATC, the flywheel mounted on the crankshaft smoothes out the speed variation due to the alternating nature of those twin-torque sources with the flywheel’s filtering action notably effective for high-order ripples.

Torque inputs generated by the engine’s power stroke and reciprocating action aren’t the only sources that have to be dealt with. ‘Reaction’ torque also tries to rotate the engine frame, causing further vibrations. Normally, the engine mounting system curbs the amount of vibration transmitted from the engine frame to the foundation, and simple rubber mounts are frequently used for mounting engines. Together they function as a low-pass filter with a good level of attenuation at a high-frequency range.

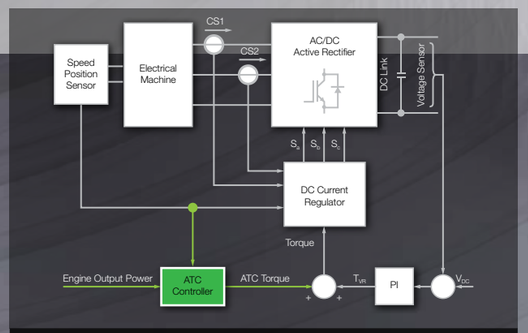

Control diagram

However, the vibrations caused by lower-order components of the roll torque also present a challenge in the mounting-system design. ‘Soft’ generating-set mounting designs attenuate the lower frequencies so that any transmitted vibration is reduced. When the mounting system design is not sufficient, a secondary isolator may be included to achieve the desired result. In some instances, even with the help of secondary isolators, acceptable vibration levels are still not attained. This forces the designer to raise the minimum running speed although this inevitably means compromising on noise. Thus, Cummins Generator Technologies’ strategy is to reduce roll torque at the lower orders using ATC, so that lower speed operation is still possible but without the risk of excessive vibration.

Moreover, although previous studies have concentrated on reducing speed variation in order to address crankshaft torque. When looking at the problem of transmitted vibration Cummins’ view is that performance should be evaluated using other means than simply adjusting the engine’s operating speed. In tests using the experimental generating-set, when running at 1400rpm at no load, ATC showed a number of major improvements in the engine’s roll, translational and transmitted vibrations.

Given the inherent characteristics of lower cylinder count engines, ATC has proved to be an eminently practical way to reduce transmitted vibrations with significant improvements achieved during tests. With ATC, Cummins Generator Technologies’ practical approach not only targets the critical roll-torque component of vibration, thereby avoiding the need to over-size the machine or power electronics components but also, by attenuating low frequency and critical vibration modes, its benefits could also extend to the design of more effective-mounting systems too. That sounds like an all-round win-win to us - for the next generation of generating-sets, big or small.
For further information please contact Krzysztof Paciura - krzysztof.paciura@cummins.com